DORGEAN
Beijing Dorgean Electronic Technology Co.,Ltd

Instrument Expert
Original factory
packaging
www.dorgean.com

Humidity and temperature measuring instruments

HF3/HF4

HF3 room version

HF3
Improved Accuracy
~~±2 %rh and ±0.3 K~~
to ±1.5 %rh and ±0.2 K
Only duct & wall version

HF4 wall version

Benefits

- Measures relative humidity, temperature and can calculate the dew point
- Absolute repeatability guaranteed
- Freely programmable and scalable analog outputs

Applications

- HVAC applications
- Climate control in office buildings, museums, warehouses and libraries
- For use in offices and rooms where appearance is important

General Information

Order Code	HF3	HF4
Sensors / Calibration	• Temperature adjustment two point with software, HF4 one point directly with the device keypad • Humidity adjustment two point or multi point with software, HF4 one point directly with the device keypad	
Display	• Models with display available • Display freely configurable	
Connections	Analogue signals on screw terminals	Analogue signals on screw terminals, Models with Ethernet(LAN), RS-485

Technical Information

Dimension of HF3 Typ D/W/R/S

Wall version (W)

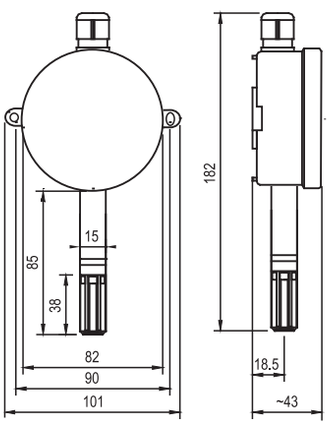

Duct version (D)

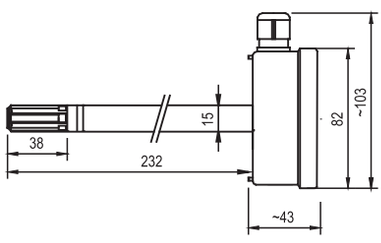

Space version (R)

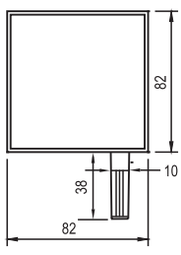

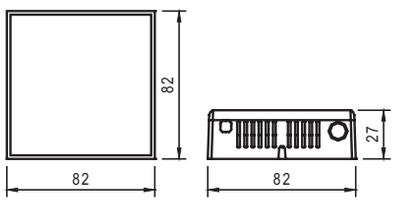

www.rotronic.com
www.ProcessSensing.com
rotronic
MEASUREMENT SOLUTIONS
A PST BRAND

Dimension of HF4 Typ D/W

Wall version (W)

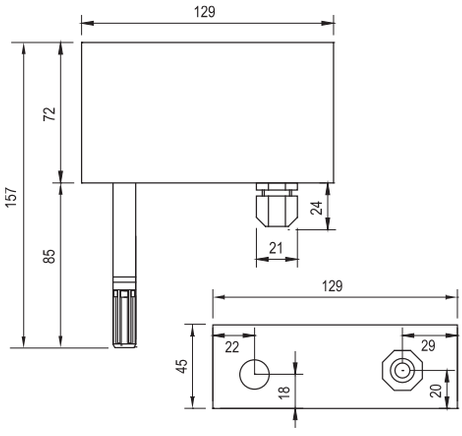

Duct version (D)

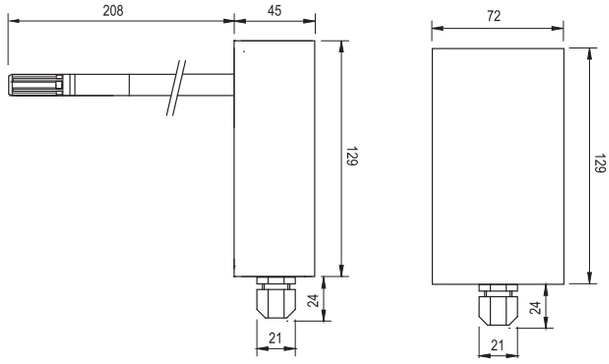

HF3 & HF4 Technical Information

	HF3	HF4
General Specifications		
Type	HF32: 2 wire HF33: 3 wire	HF42: 2 wire HF43: 3 wire
Probe	Fix mounted probe housing polycarbonat	
Parameters	Dew point calculation	
Application range	Temperature: -40...60 °C Humidity: 0...100 %rh	Temperature: -50...100 °C Humidity: 0...100 %rh
Accuracy at 23°C	Temperature: ±0.2 K Humidity: ±1.5 %rh / ±1 %rh Typ R	Temperature: ±0.2 K Humidity: ±1.0 %rh
Alarm	Open or shorted sensor (programmable)	
Service interface	UART	
Instrument-Specific Data		
Current consumption	HF32: 2 x 20 mA max HF33/ 35: < 150 mA Typ W&D, < 250mA Typ R&S	HF42: 4...20 mA HF43/ 45: < 50 mA
Warm-up time	< 15 sec.	
Standard output	HF32: 4...20 mA HF332: 4...20 mA / HF335: 0...10 V	HF42: 4...20 mA HF432: 4...20 mA / HF435: 0...10 V
Output analogue signal	All 3 wire transmitters can be freely selectable by users: 0...1 V, 0...5 V, 0...10 V, 0...20 mA, 4...20 mA	
Humidity Measurement		
Humidity sensor	ROTRONIC HYGROMER® IN-1	
Temperature Measurement		
Sensor	PT100 class B 1/3	
Software		
HygroSoft	Available as download at www.ProcessSensing.com	
Conformities/Housing		
CE / EMC compatibility	EMC Directive 2014/30/EU: EN 61000-6-1, EN 61000-6-2, EN 61000-6-3, EN 61000-6-4: + A11	
Housing material	ABS	
Dimensions	See technical drawing of HF3 / HF4	

Subject to technical change without notice. Printing and other errors reserved.

59105E/2023-03